ECEN 36—Week-05

Interfacing with the World: Digital

- Because of our development in the premortal life, each of us comes to earth with a unique combination of talents and abilities.
- When we rely on the Spirit, the Lord will help us recognize and develop our talents and abilities.
- The Lord will help us overcome our doubts and fears as we seek His help to develop our talents and abilities.
- Developing talents and abilities requires individual work.

POTD: Bring to the Table

BRIGHAM YOUNG UNIVERSITY IDAHO

Basic Electricity Review

- Terms
  - Coulomb — SI Unit of Charge = $6.25*10^{18}$
  - Voltage — Potential Energy of Elect. Charge
  - Potential energy — Energy stored by virtue of position
  - Kinetic energy — Energy possessed by motion
  - Volt — Unit of electric potential
  - Current — Movement (flow) of electrons
  - Ampere (amp) — 1 Coulomb / sec. Or 1V thru 1Ω

BRIGHAM YOUNG UNIVERSITY IDAHO

Simple Analogy: Garden Hose

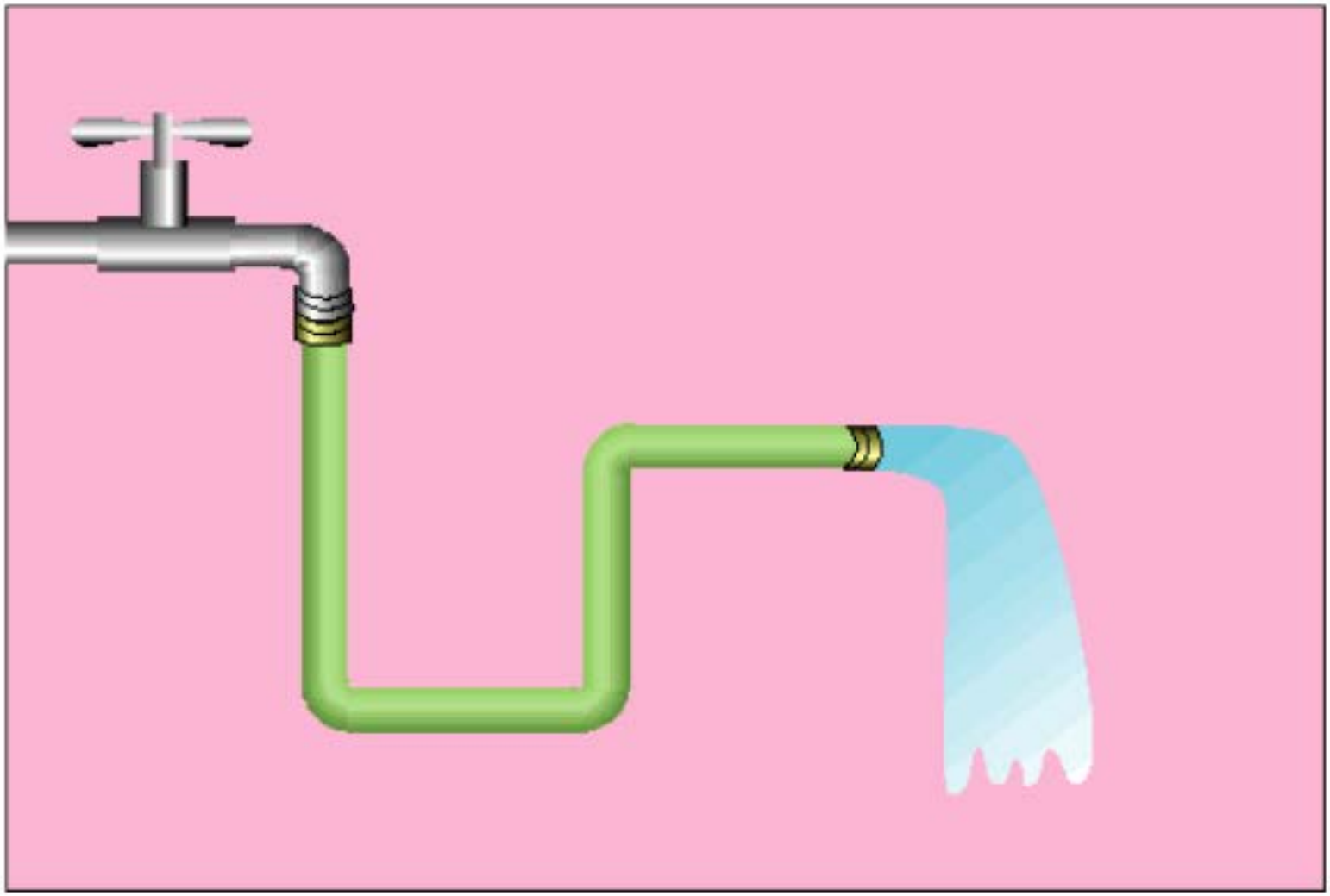

Current: Garden Hose

Garden Hose Analogy

How does current relate to the garden hose?

Electrical current flow thru a wire is similar to the flow of water thru the hose.

BRIGHAM YOUNG UNIVERSITY IDAHO

Voltage: Garden Hose

Garden Hose Analogy

How does voltage relate to the garden

Electrical voltage provides the energy (Current) thru the water, and a Pump p flow of water thru the hose.

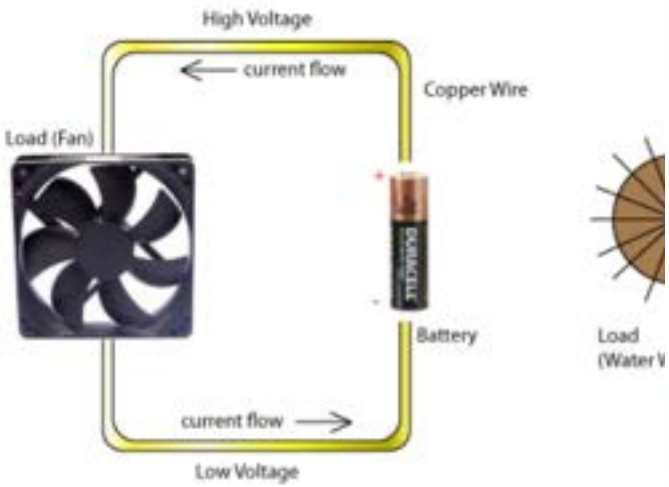

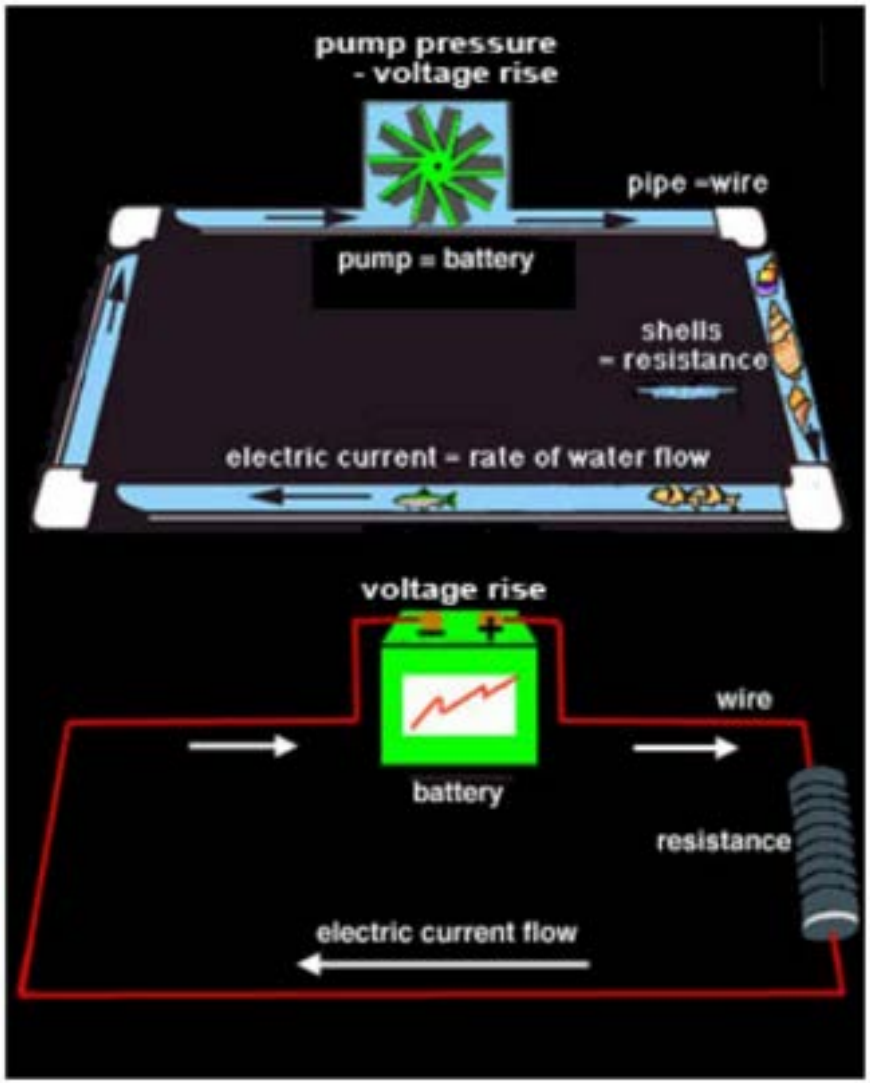

BRIGHAM YOUNG UNIVERSITY IDAHO

Resistance: Garden Hose

Garden Hose Analogy

How does resistance relate to the garden hose?

Electrical resistance opposes the flow of charges in a wire and the hose can restrict the flow of water thru bending of the hose or a kink in the hose.

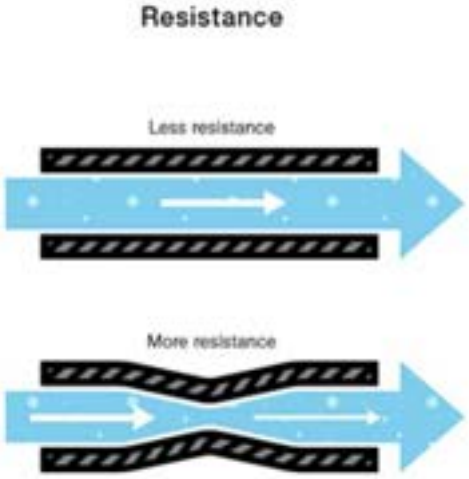

BRIGHAM YOUNG UNIVERSITY IDAHO

Why do we care?

Inputs / Outputs to / from the μC follow electric laws. Voltage/Current/Power -- all apply

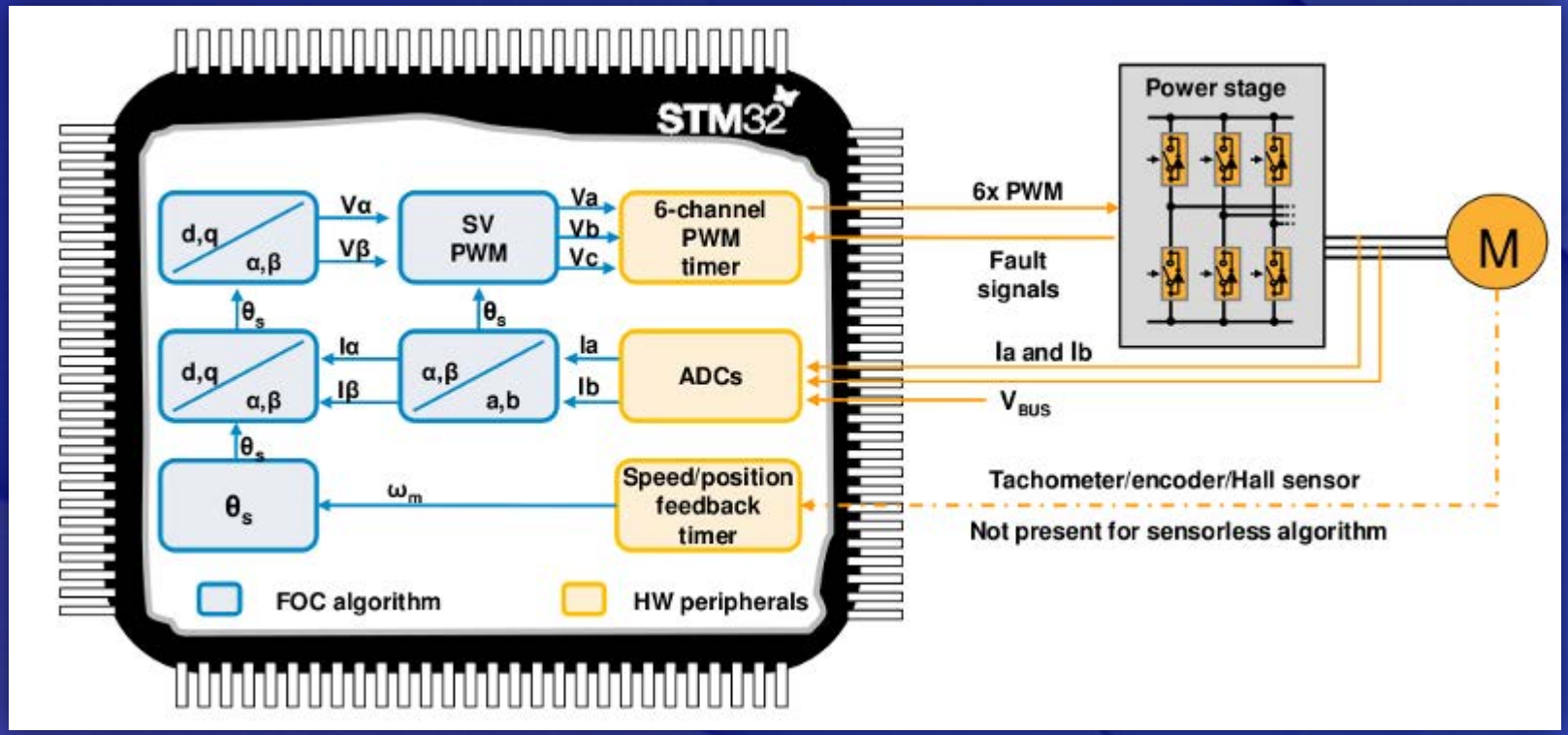

BRIGHAM YOUNG UNIVERSITY IDAHO

Accessing the µController

- We need to get information between.
  µController ⇔ Real World (Things in our System)
- Some of that information is Digital – On/Off. (3.3V / 0V)
- Some of that information is Analog – (5V …. 0V)
- Both of these might come synchronously or asynchronously
- Some of that information comes in the form of Standard Serial Communications Busses. For example:
  - UART
  - I2C/SPI
  - USB
  - Bluetooth/WIFI

BRIGHAM YOUNG UNIVERSITY IDAHO

Nucleo 476RG

Figure 24. NUCLEO-L476RG

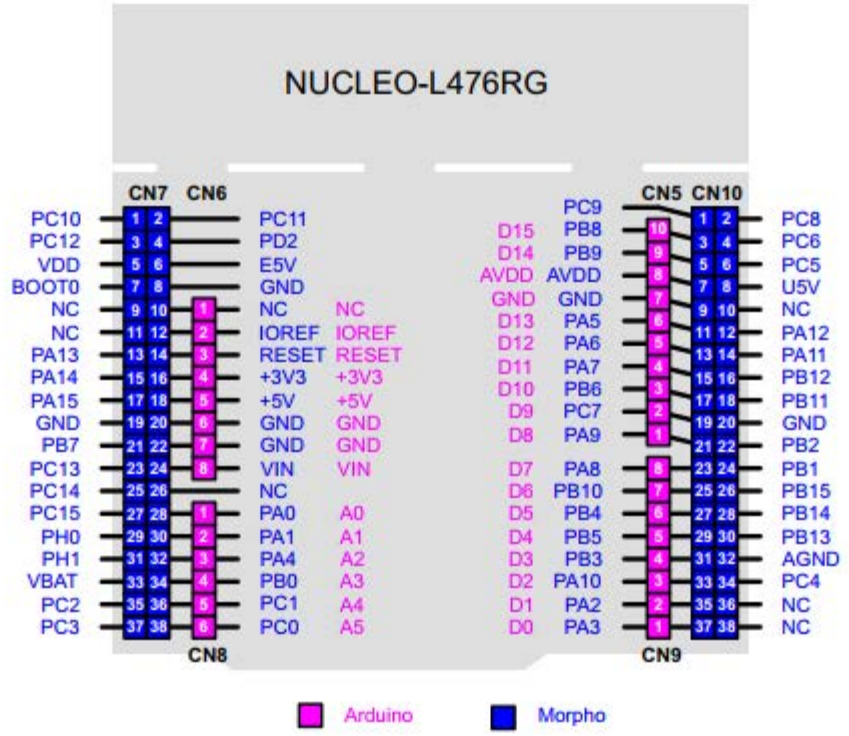

Digital I/O

Digital Signals are either On or Off
1 or 0
Or are they?

BRIGHAM YOUNG UNIVERSITY IDAHO

Digital I/O

Voltage = Current * Resistance

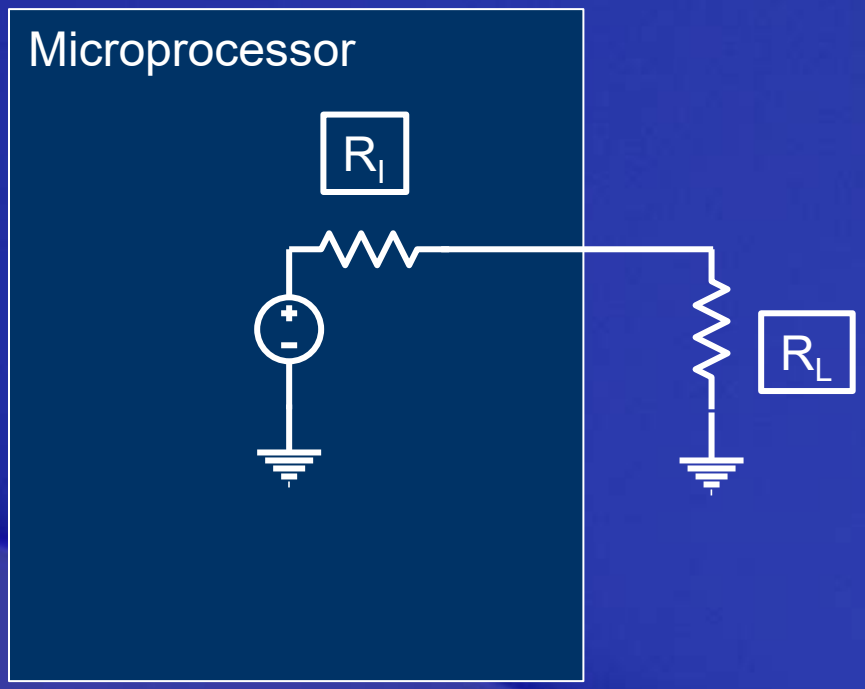

What is the Voltage?

What is the current?

OUTPUT PIN

Digital I/O Output

Digital Interfacing (Currents)

Family	Example	I_{OH}	I_{OL}	I_{IH}	I_{IL}
Standard TTL	7404	0.4 mA	16 mA	40 µA	1.6 mA
Schottky TTL	74S04	1 mA	20 mA	50 µA	2 mA
Low Power Schottky	74LS04	0.4 mA	4 mA	20 µA	0.4 mA
High Speed CMOS	74HC04	4 mA	4 mA	1 µA	1 µA
Adv High Speed CMOS	74AHC04	4 mA	4 mA	1 µA	1 µA
MSP432 regular drive	MSP432	6 mA	6 mA	20 nA	20 nA
MSP432 high drive	MSP432	20 mA	20 mA	20 nA	20 nA
TM4C 8mA-drive	TM4C123	8 mA	8 mA	2 µA	2 µA
TM4C 12mA-drive	TM4C1294	12 mA	12 mA	2 µA	2 µA

Increased drive strength on P2.0, P2.1, P2.2, and P2.3

$V_{OL} \le V_{IL}$ for all inputs and $V_{OH} \ge V_{IH}$ for all inputs
$I_{OL} \ge \sum I_{IL}$ for all inputs and $I_{OH} \ge \sum I_{IH}$ for all inputs

BRIGHAM YOUNG UNIVERSITY IDAHO

Chip & Pins Have Current Limits

Symbol	Ratings	Max.	Unit
I_{VDD}	Total current into V_{DD}/V_{DDA} power lines (source)(1)	150	
I_{VSS}	Total current out of V_{SS} ground lines (sink)(1)	150	
I_{IO}	Output current sunk by any I/O and control pin	25	
	Output current source by any I/Os and control pin	–25	mA

- In a design – current (and heat) budgets have to be set.
- Conscious of ‘concurrent’ drives

Digital I/O Output

What if we can't drive directly?
What if the pin (25mA or 3.3V) isn't enough?

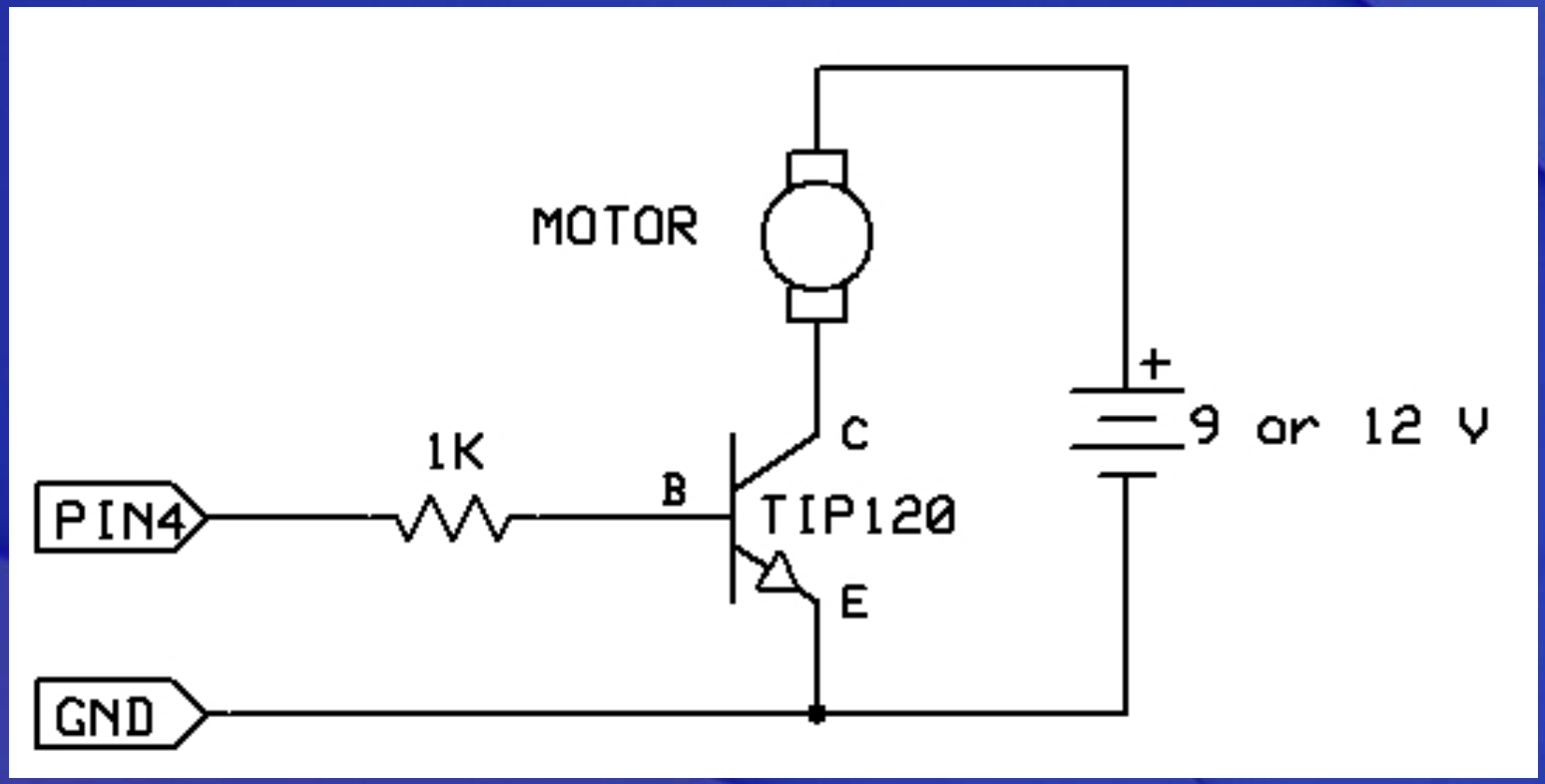

BRIGHAM YOUNG UNIVERSITY IDAHO

Digital I/O Output

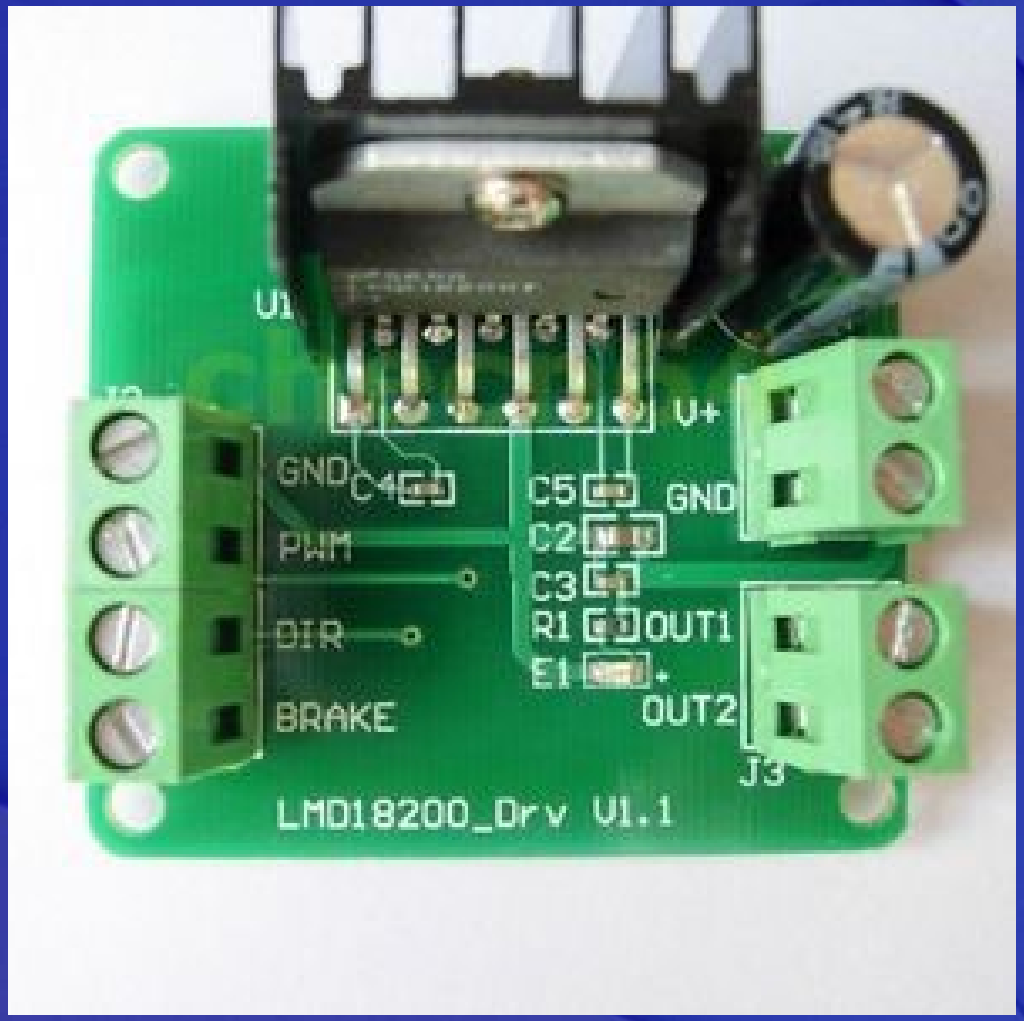

BRIGHAM YOUNG UNIVERSITY IDAHO

Digital I/O Input

- What is the input voltage?
- What if we need 3.3 Volts and are given 5?
- What if we need 5 Volts and are given 3.3?

On the STM32 – Inputs are 5-Volt tolerant

Not all chips are this way &
you can damage the part!

BRIGHAM YOUNG UNIVERSITY IDAHO

Digital I/O Output. Level Shifters

What if we need 3.3 Volts and are given 5?
What if we need 5 Volts and are give 3.3?

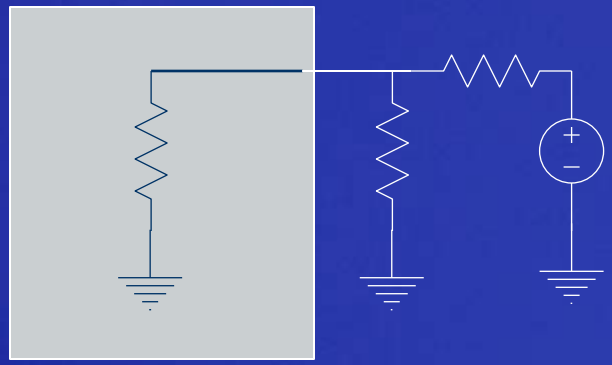

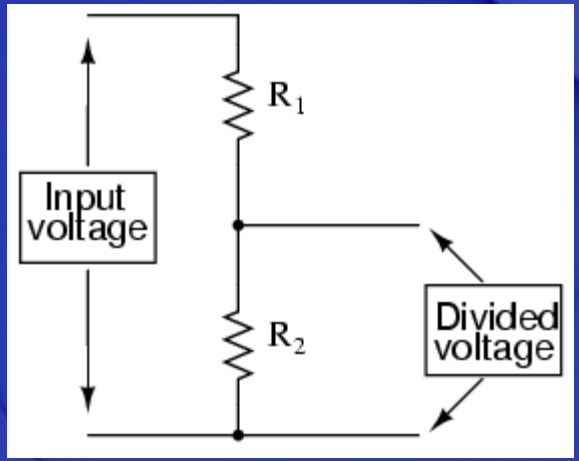

Digital I/O Output

What if we need 3.3 Volts and are given 5?
What if we need 5 Volts and are given 3.3?

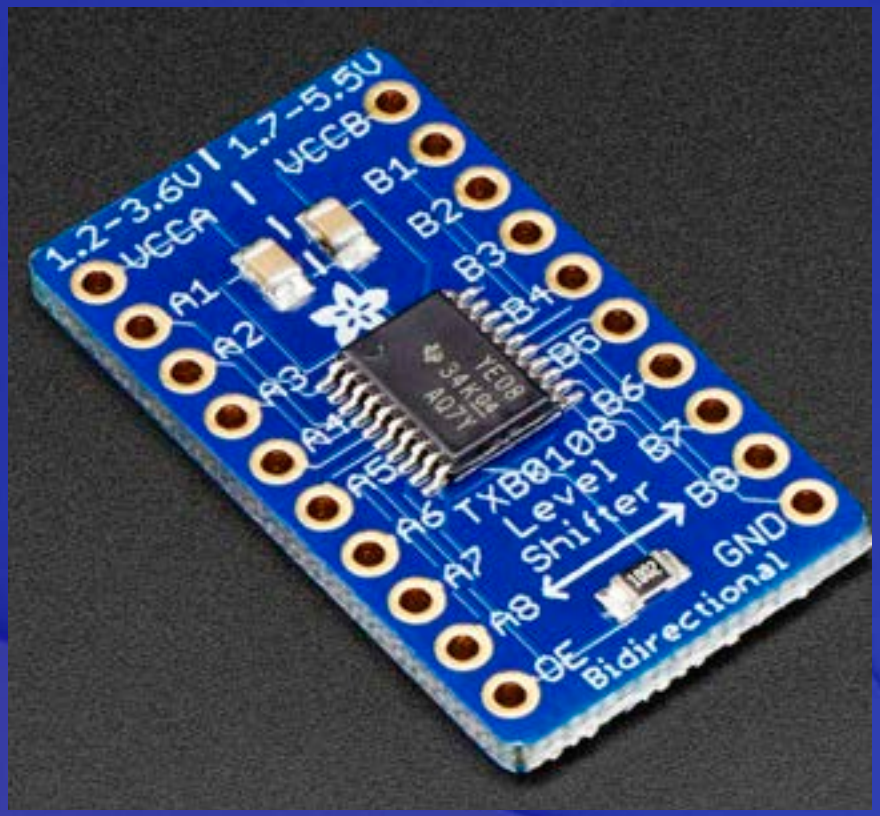

Logic Levels vs. Voltage Levels

From the Software perspective we can either use a low-level or a high-level driver to configure and access the hardware.

- High-level = True/Active: Positive True Logic
- Low-level = True / Active: Negative True Logic

BRIGHAM YOUNG UNIVERSITY IDAHO

GPIO –Multi-Function Configurable

Input, Output, Special Function, Analog

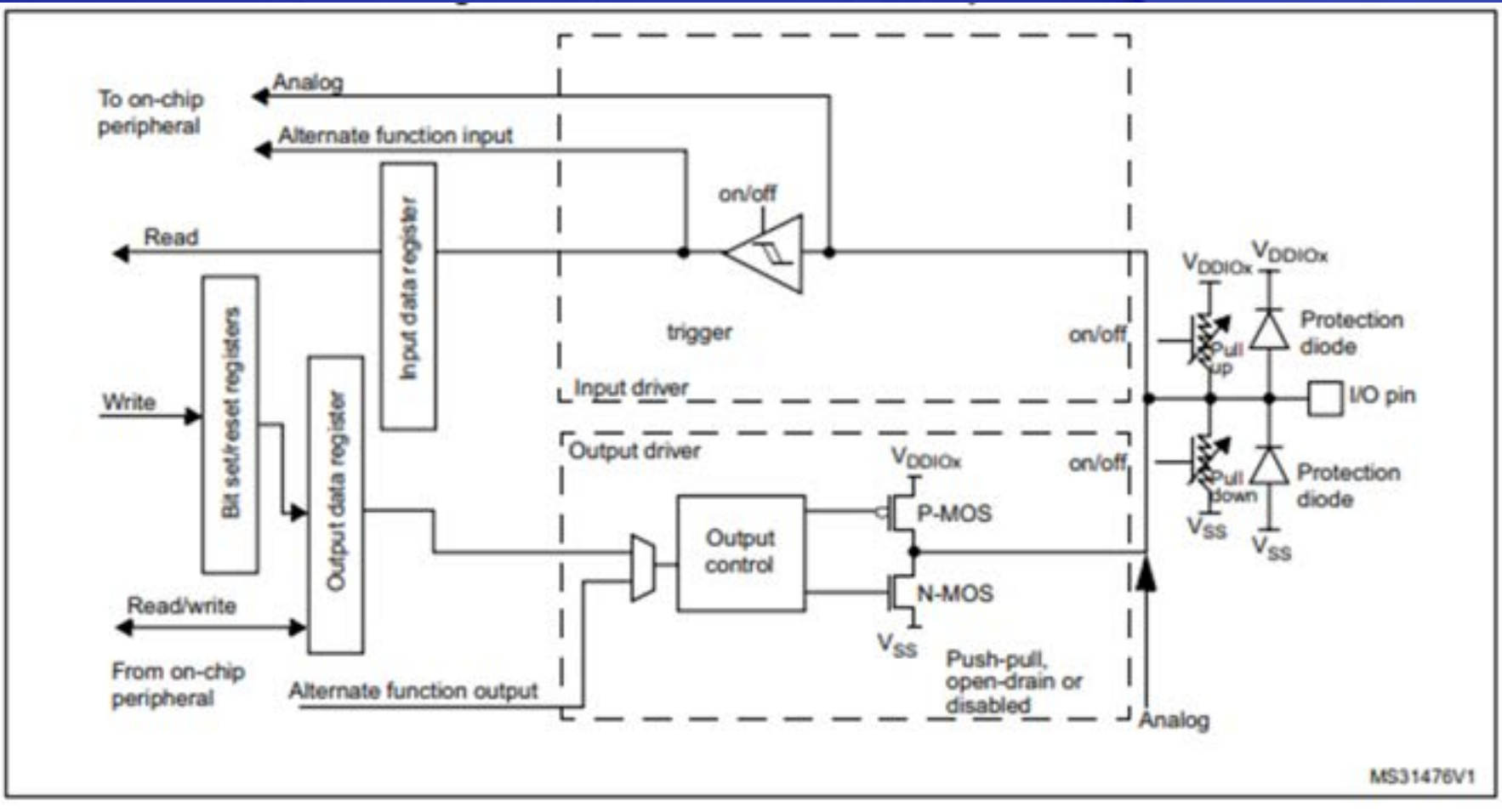

BRIGHAM YOUNG UNIVERSITY IDAHO

Schmitt Trigger / Hysteresis

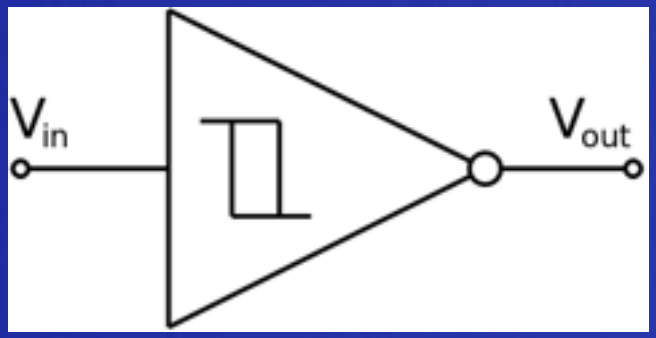

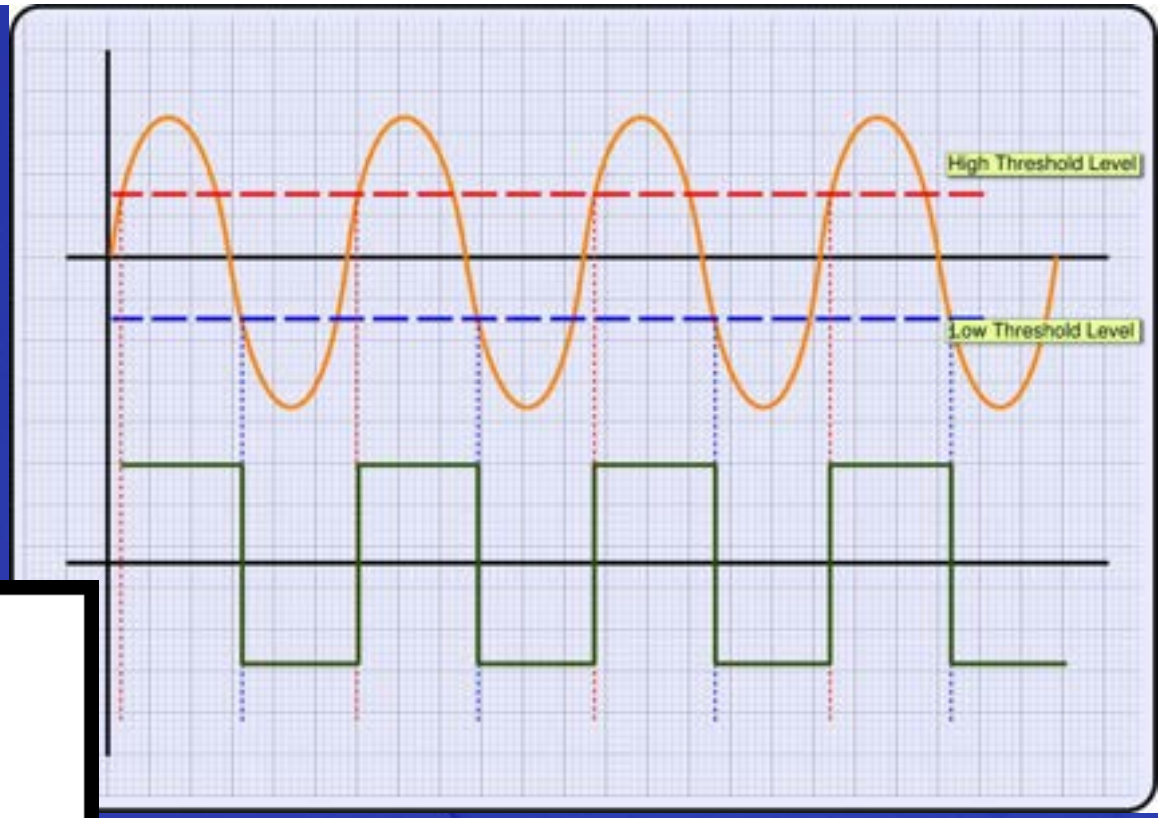

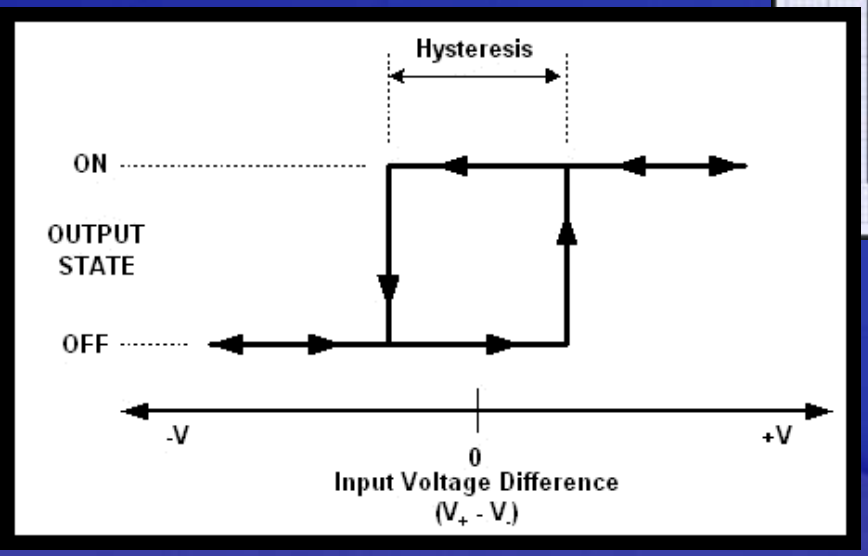

BRIGHAM YOUNG UNIVERSITY IDAHO

GPIO Pin Specs: DC – Voltage/Current

6.1.5 Pin input voltage

The input voltage measurement on a pin of the device is described in *Figure 22*.

Figure 21. Pin loading conditions

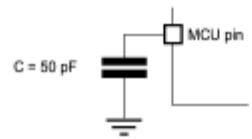

Figure 22. Pin input voltage

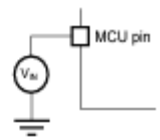

Table 71. Output voltage characteristics(1)

Symbol	Parameter	Conditions	Min	Max	Unit
V_{OL}	Output low level voltage for an I/O pin	CMOS port(2) $\lvert I_{IO}\rvert$ = 8 mA(3) $V_{DDIOx} \geq 2.7$ V	-	0.4	V
V_{OH}	Output high level voltage for an I/O pin		V_{DDIOx}-0.4	-	
V_{OL}(4)	Output low level voltage for an I/O pin	TTL port(2) $\lvert I_{IO}\rvert$ = 8 mA(5) $V_{DDIOx} \geq 2.7$ V	-	0.4	
V_{OH}(4)	Output high level voltage for an I/O pin		2.4	-	
V_{OL}(4)	Output low level voltage for an I/O pin	PC13, PC14 and PC15 $\lvert I_{IO}\rvert$ = 3 mA $V_{DDIOx} \geq 2.7$ V	-	0.07	
V_{OH}(4)	Output high level voltage for an I/O pin		V_{DDIOx}-0.35	-	
V_{OL}(4)	Output low level voltage for an I/O pin	$\lvert I_{IO}\rvert$ = 20 mA(5) $V_{DDIOx} \geq 2.7$ V	-	1.3	
V_{OH}(4)	Output high level voltage for an I/O pin		V_{DDIOx}-1.3	-	
V_{OL}(4)	Output low level voltage for an I/O pin	$\lvert I_{IO}\rvert$ = 4 mA(3) $V_{DDIOx} \geq 1.62$ V	-	0.45	
V_{OH}(4)	Output high level voltage for an I/O pin		V_{DDIOx}-0.45	-	
V_{OL}(4)	Output low level voltage for an I/O pin	$\lvert I_{IO}\rvert$ = 2 mA 1.62 V ≥ V_{DDIOx} ≥ 1.08 V	-	0.35xV_{DDIOx}	
V_{OH}(4)	Output high level voltage for an I/O pin		0.65xV_{DDIOx}	-	
V_{OLFM+}(4)	Output low level voltage for an FT I/O pin in FM+ mode (FT I/O with 'f' option)	$\lvert I_{IO}\rvert$ = 20 mA $V_{DDIOx} \geq 2.7$ V	-	0.4	
		$\lvert I_{IO}\rvert$ = 10 mA $V_{DDIOx} \geq 1.62$ V	-	0.4	
		$\lvert I_{IO}\rvert$ = 2 mA 1.62 V ≥ V_{DDIOx} ≥ 1.08 V	-	0.4	

1. The I_{IO} current sourced or sunk by the device must always respect the absolute maximum rating specified in *Table 19: Voltage characteristics*, and the sum of the currents sourced or sunk by all the I/Os (I/O ports and control pins) must always respect the absolute maximum ratings ΣI_{IO}.
2. TTL and CMOS outputs are compatible with JEDEC standards JESD36 and JESD52.
3. PC13, PC14 and PC15 are tested/characterized at their maximum current of 3 mA.
4. Guaranteed by design.
5. Not applicable to PC13, PC14 and PC15.

BRIGHAM YOUNG UNIVERSITY IDAHO

GPIO Pin Specs: A/C Switching

In using I/O – have to look at the physical specifications: Speed (below),

Figure 34. I/O AC characteristics definition(1)

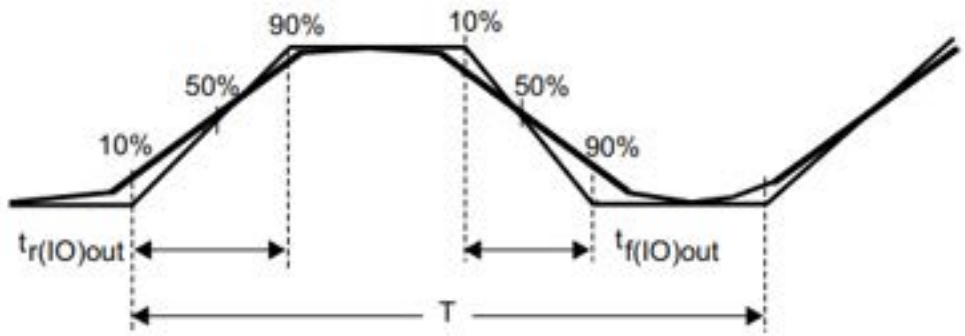

Maximum frequency is achieved with a duty cycle at (45 - 55%) when loaded by the specified capacitance.

MS32132V4

BRIGHAM YOUNG UNIVERSITY IDAHO

Specs – Continued

- Physical –

  Regardless of how fast the processor tries, this is how fast the pin will change.

Table 72. I/O AC characteristics[1][2]

Speed	Symbol	Parameter	Conditions	Min	Max	Unit
00	Fmax	Maximum frequency	C=50 pF, 2.7 V≤V_{DDIOx}≤3.6 V	-	5	MHz
			C=50 pF, 1.62 V≤V_{DDIOx}≤2.7 V	-	1	
			C=50 pF, 1.08 V≤V_{DDIOx}≤1.62 V	-	0.1	
			C=10 pF, 2.7 V≤V_{DDIOx}≤3.6 V	-	10	
			C=10 pF, 1.62 V≤V_{DDIOx}≤2.7 V	-	1.5	
			C=10 pF, 1.08 V≤V_{DDIOx}≤1.62 V	-	0.1	
	Tr/Tf	Output rise and fall time	C=50 pF, 2.7 V≤V_{DDIOx}≤3.6 V	-	25	ns
			C=50 pF, 1.62 V≤V_{DDIOx}≤2.7 V	-	52	
			C=50 pF, 1.08 V≤V_{DDIOx}≤1.62 V	-	140	
			C=10 pF, 2.7 V≤V_{DDIOx}≤3.6 V	-	17	
			C=10 pF, 1.62 V≤V_{DDIOx}≤2.7 V	-	37	
			C=10 pF, 1.08 V≤V_{DDIOx}≤1.62 V	-	110	
01	Fmax	Maximum frequency	C=50 pF, 2.7 V≤V_{DDIOx}≤3.6 V	-	25	MHz
			C=50 pF, 1.62 V≤V_{DDIOx}≤2.7 V	-	10	
			C=50 pF, 1.08 V≤V_{DDIOx}≤1.62 V	-	1	
			C=10 pF, 2.7 V≤V_{DDIOx}≤3.6 V	-	50	
			C=10 pF, 1.62 V≤V_{DDIOx}≤2.7 V	-	15	
			C=10 pF, 1.08 V≤V_{DDIOx}≤1.62 V	-	1	
	Tr/Tf	Output rise and fall time	C=50 pF, 2.7 V≤V_{DDIOx}≤3.6 V	-	9	ns
			C=50 pF, 1.62 V≤V_{DDIOx}≤2.7 V	-	16	
			C=50 pF, 1.08 V≤V_{DDIOx}≤1.62 V	-	40	
			C=10 pF, 2.7 V≤V_{DDIOx}≤3.6 V	-	4.5	
			C=10 pF, 1.62 V≤V_{DDIOx}≤2.7 V	-	9	
			C=10 pF, 1.08 V≤V_{DDIOx}≤1.62 V	-	21	

Output State Can & Should be Read

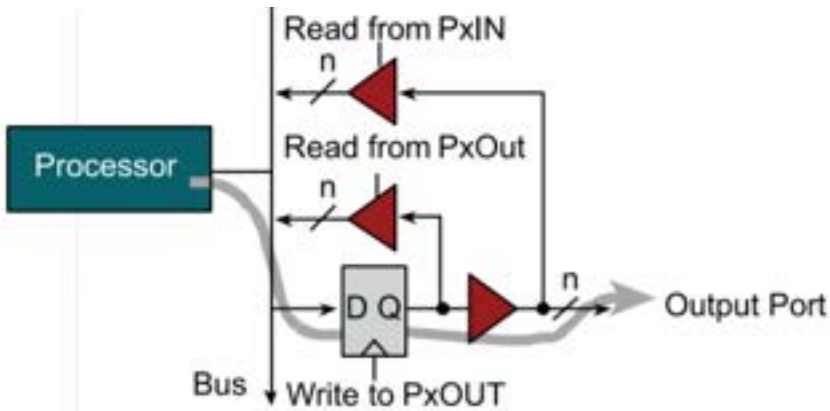

1. Read from port
2. Clear bits of interest
3. Set/clear bits of interest
4. Write back to port

```
void LED(uint8_t new){
uint8_t old;
  old = P1->OUT;
  old = old&(~0x01);
  new = new|old;
  P1->OUT = new;
}
void LED(uint8_t new){
 P1->OUT = (P1-
>OUT&(~0x01))|new;
}
```

Friendly

Friendly means just changes the bits you need,
without changing the bits you do not need.

BRIGHAM YOUNG UNIVERSITY IDAHO

Digital Input Always Reads Full "Port (16-bit)

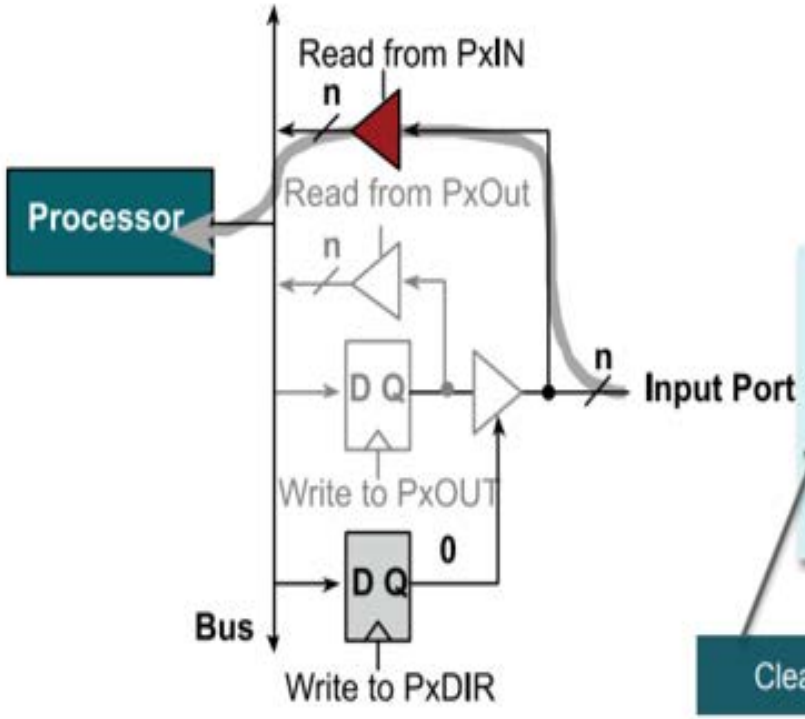

Alternate function
0 for GPIO
1 for alternate

```
// Make P1.1 an input
void SW1_Init(void){
  P1->SEL0 &= ~0x02;
  P1->SEL1 &= ~0x02;
  P1->DIR &= ~0x02;
}
```

Clear bit 1

Direction
0 for input
1 for output

Selecting Type of Digital Comm

Is the input synchronous or asynchronous?
(in general you won't choose, just match)

- Synchronous – Data comes with a Clock Cycle
  - We will read a value at a specific time in the program
- Asynchronous – Data comes at an expected rate or with a pattern:
  - We can either poll or use an interrupt.

BRIGHAM YOUNG UNIVERSITY IDAHO

For Serial Communications ALWAYS Use built-in H/W

- Waste of a uC to poll for serial data
- Use interrupts per-byte
- Better yet: Interrupt on DMA with buffer

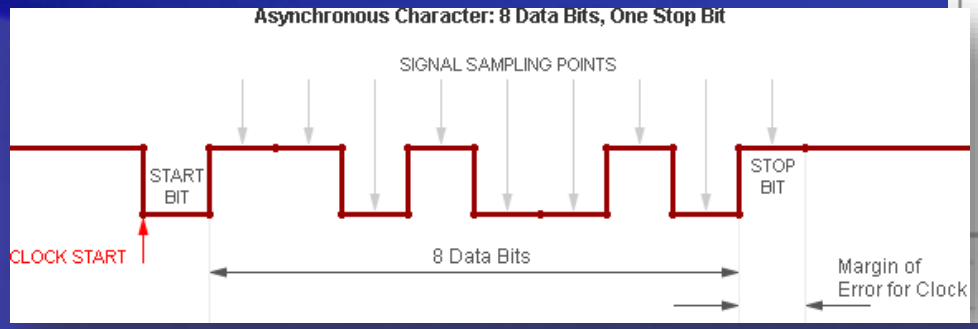

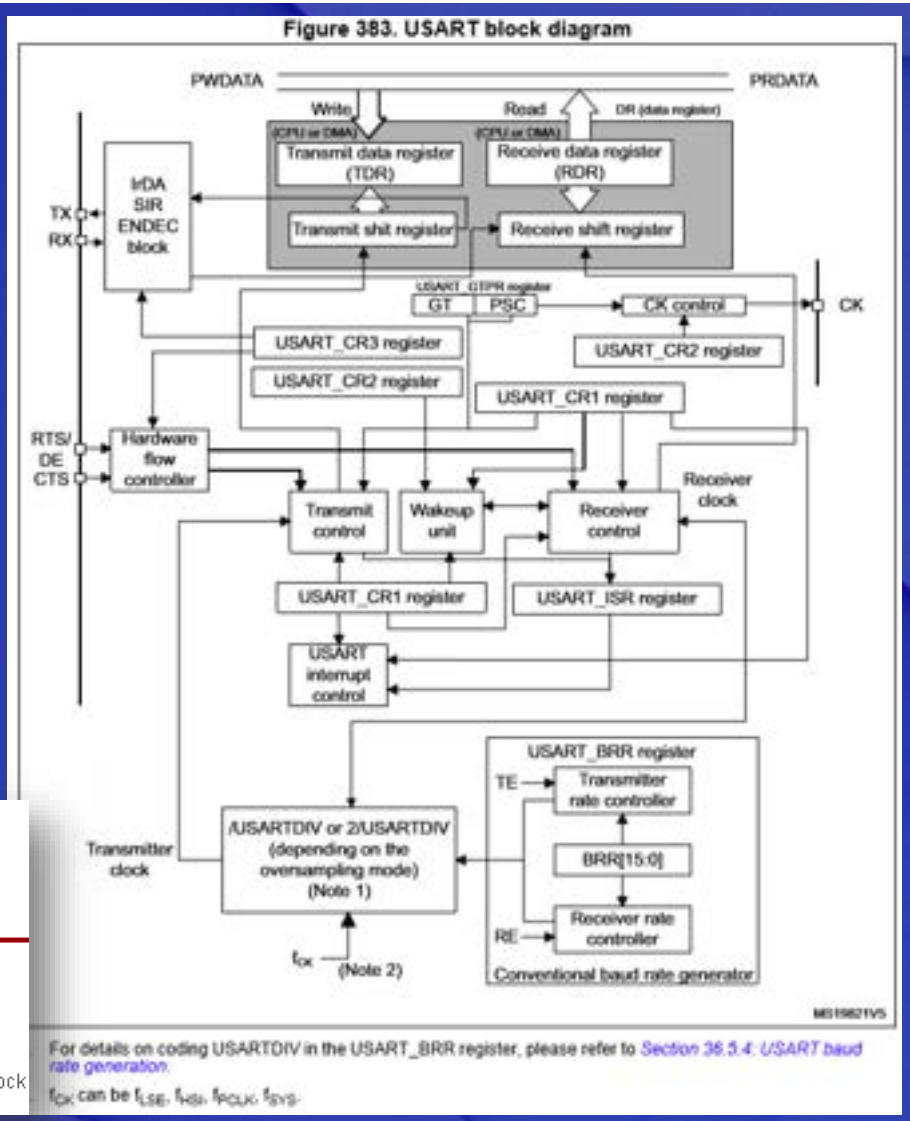

BRIGHAM YOUNG UNIVERSITY IDAHO

Digital I/O – Standard Communications Busses

- Some information comes in the form of Standard Communications Busses. Example:

- UART (RS-232, RS-422)
- I^2C (current Version 5.0)
- Universal Serial (USB, 1.0, 2.0, …)
- Wifi/Bluetooth (802.11)
- Ethernet (802.1X)

Digital I/O - Serial

- Data is sent and received one bit at a time
- Transmission on single wire*

BRIGHAM YOUNG UNIVERSITY IDAHO

Digital I/O - Serial Communication

One line of communication, long string of data

Digital I/O - Why Serial?

Fewer wires translates to

- Lower cost
- Simpler set-up

Digital I/O – Synchronous Serial

- Sender and receiver have their clocks synchronized
- Transmissions occur at specified intervals

- Advantage – Faster

Digital I/O – Serial Asynchronous

- Devices are not synchronized
- Transmissions happen at unpredicted intervals

- Advantages
  - Simpler (no clocks)
  - More robust

BRIGHAM YOUNG UNIVERSITY IDAHO

FYI Term: “UART” or “USART”

- Universal
- (Serial) Asynchronous
- Receiver-
- Transmitter

“…a computer component that handles asynchronous serial communication.”

www.webopedia.com

BRIGHAM YOUNG UNIVERSITY IDAHO

TTY / USART /